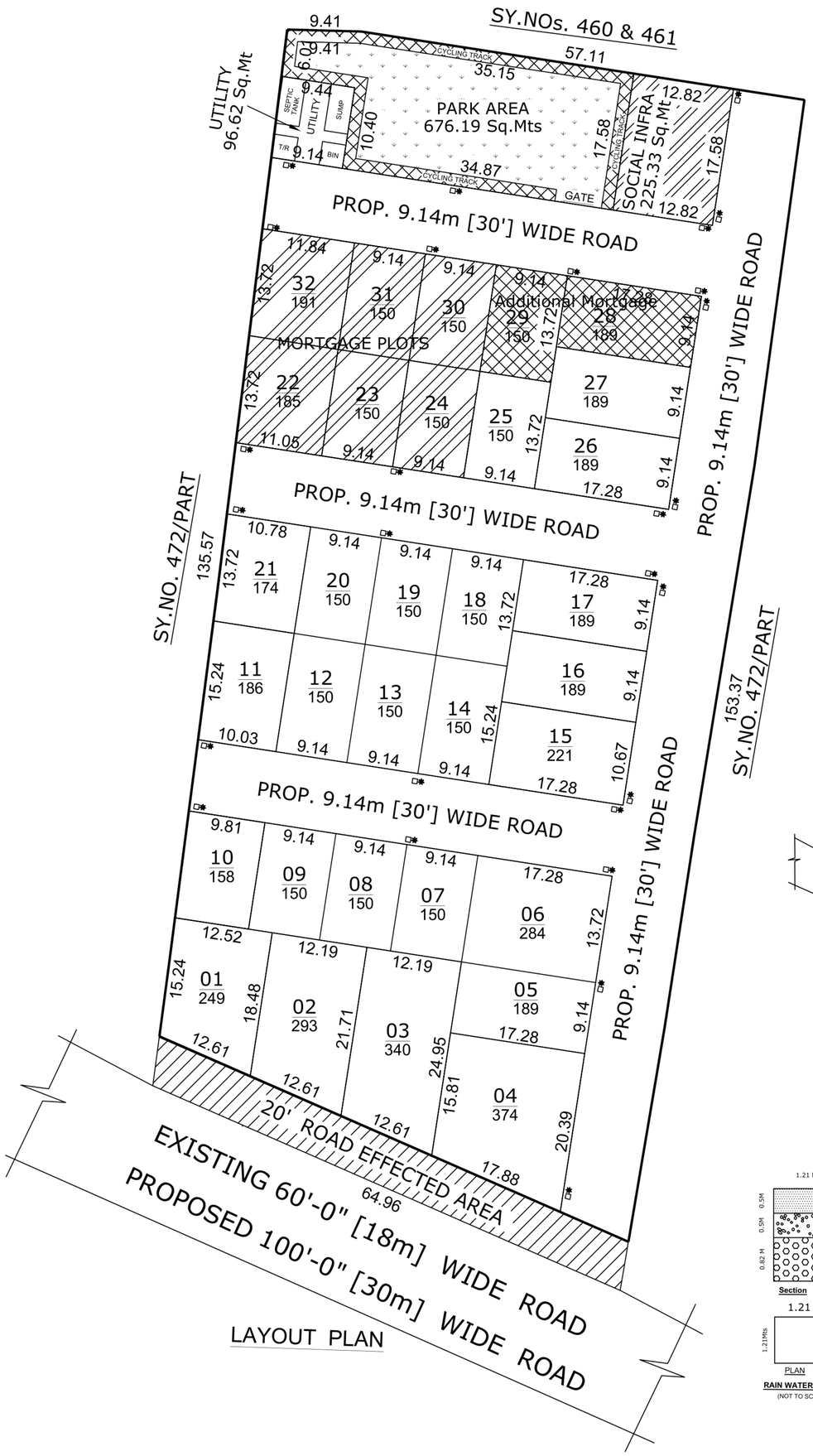

LAYOUT PLAN

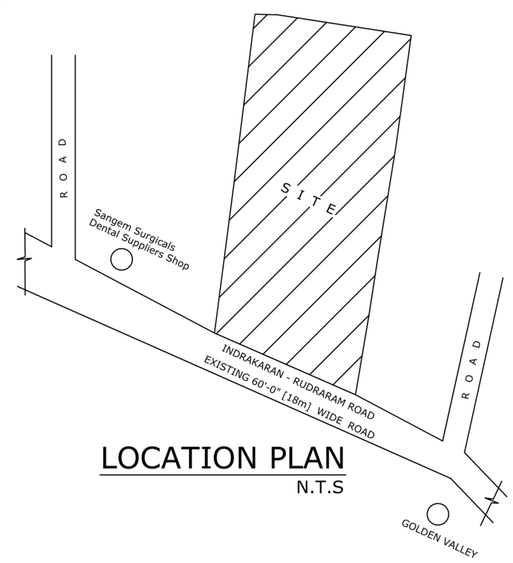

LOCATION PLAN
N.T.S

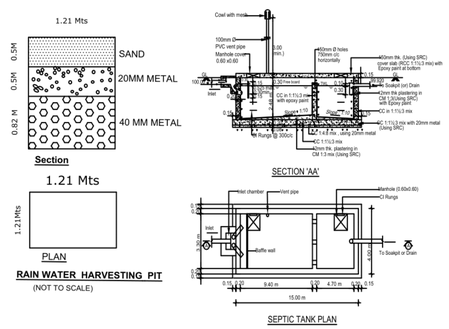

PLAN SHOWING THE PROP.RESIDENTIAL DRAFT LAYOUT IN SY No. 472/E/1/1, 472/AA2/1,472/AA1/1/1/1,472AA1, SITUATED AT INDRAKARAN VILLAGE & G.P, KANDI MANDAL, SANGA REDDY DISTRICT, TELANGANA STATE

BELONGING TO: M/S. LAIRA INFRA PROJECTS LLP
REP.BY IT'S PARTNERS
Sri. VOGU ASHOK AND OTHERS
S/o. Sri. VOGU MALLESH

STATEMENT OF AREAS

PROPOSED LAY OUT BOUNDARY
EXISTING ROADS
PROPOSED ROADS

SEPTIC TANK (S.P)
HARVESTING PITS 4X4X4
AVENUE PLANTATIONS(TREES)
SUMP
TRANSFORMER (TR)
CYCLING TRACK
DUST BIN

SCALE:1:100

PROPOSED LAYOUT AREA : Ac. 02 - 13 Gts./ 11253.09 Sq.yds / 9408.70 Sq.mts
100' ROAD EFF . AREA : 474.44 Sq.yds / 396.68 Sq.mts

NET LAYOUT AREA : Ac. 02-9.08 Gts./ 10778.65 Sq.yds / 9012.02 Sq.mts

NO. OF PLOTS : 32

LAND USE ANALYSIS

DESCRIPTION	Sq. yds	Sq.mts	%
PLOTED AREA	6088.08	5090.23	56.48
ROAD AREA	3496.77	2923.65	32.44
PARK AREA	808.74	676.19	07.50
SOCIAL INFRASTRUCTURE	269.50	225.33	02.50
UTILITY AREA	115.56	96.62	01.08
TOTAL AREA	10778.65	9012.02	100.00 %

PRO.16.02% MORTGAGE AREA 975.54 SQ.YDS OR 815.65 SQ.MTS
PRO.16.02% MORTGAGE PLOTS 22,23,24,30,31 & 32

ADDITIONAL MORTGAGE PLOTS FOR NALA: 283.46 Sq.Mts - 5.57%
ADDITIONAL MORTGAGE PLOTS : 28 & 29

For LAIRA INFRA DEVELOPERS LLP
Designated Partner

APPLICANT SIGNATURE

G.S.SREEDEVI
ARCHITECT
C.O.A No. CA/2009/46164

ARCHITECT SIGNATURE